(19)

(12)

(10)
(45)

(21)

(22)

(73)

(72)

(51) Int .Cl .
B66F 9/06
B66F 9/075
B66F 9/08
B66F 9/22
B66F 17/00

(54)

(57)

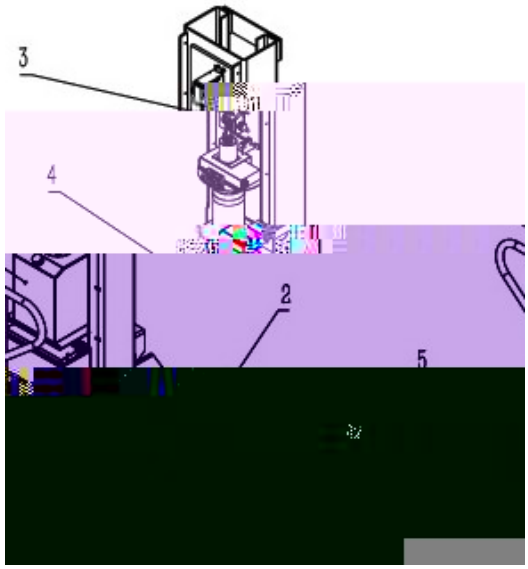

[0001]

[0002]

[0003]

[0012]

[0013]

[0014]

[0015]

[0016]

[0017]

[0018]

[0019]

[0020]

[0021] [002 Ů

[002 ƀ

[0

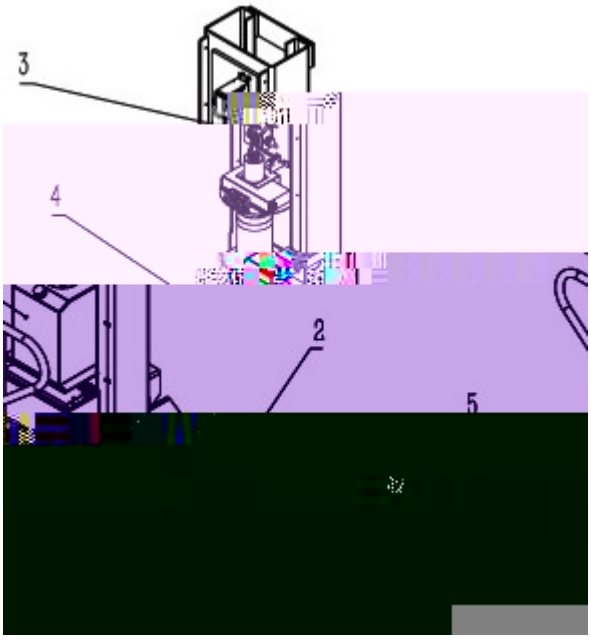
3
4
2
5

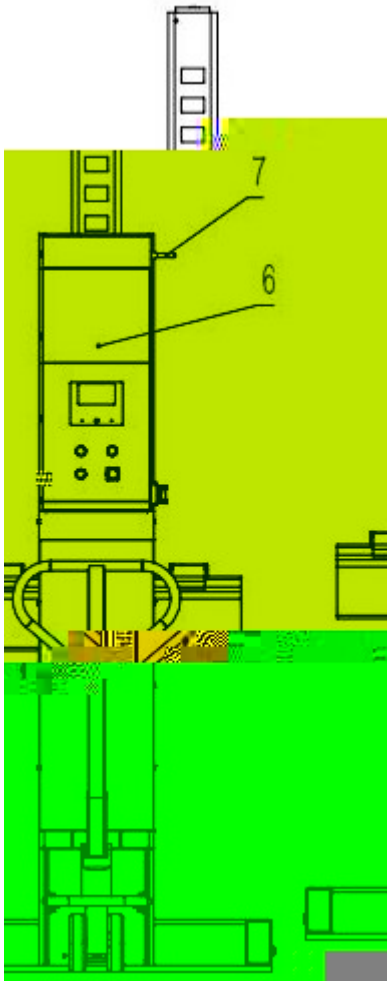
7
6

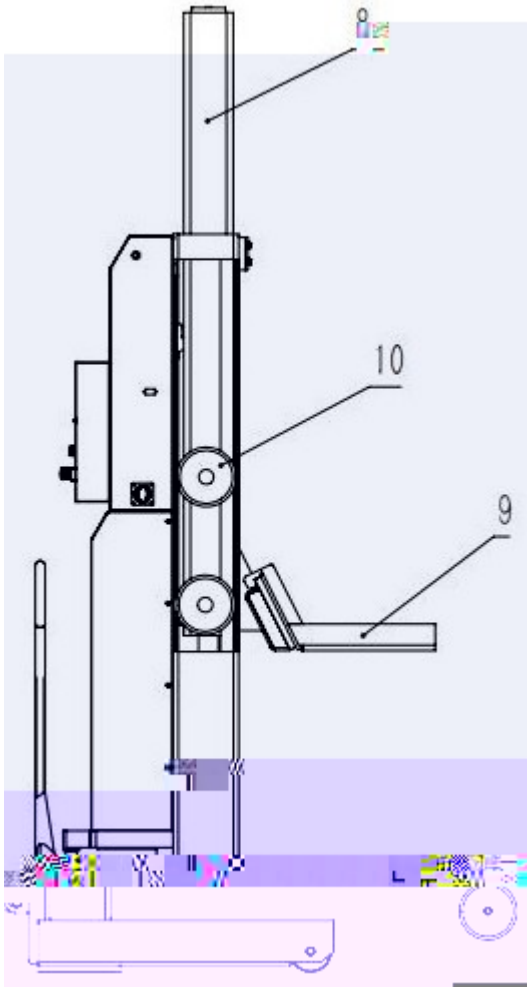
8
10
9